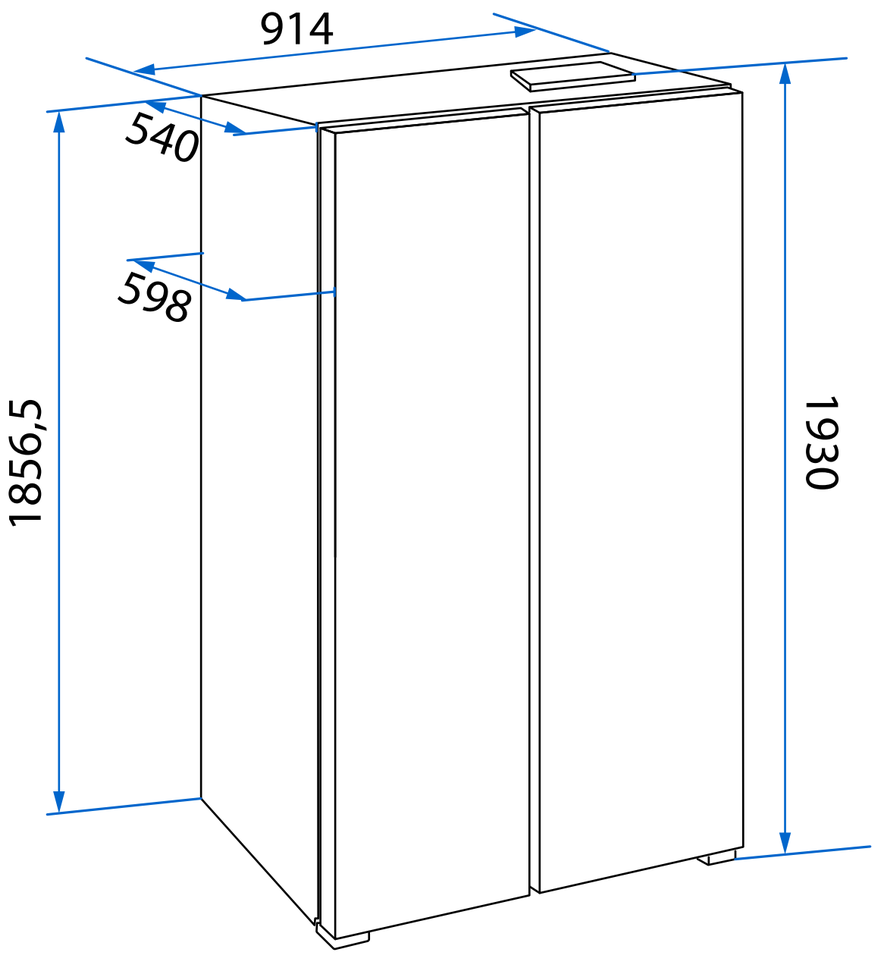
914
540
598
1856,5
1930

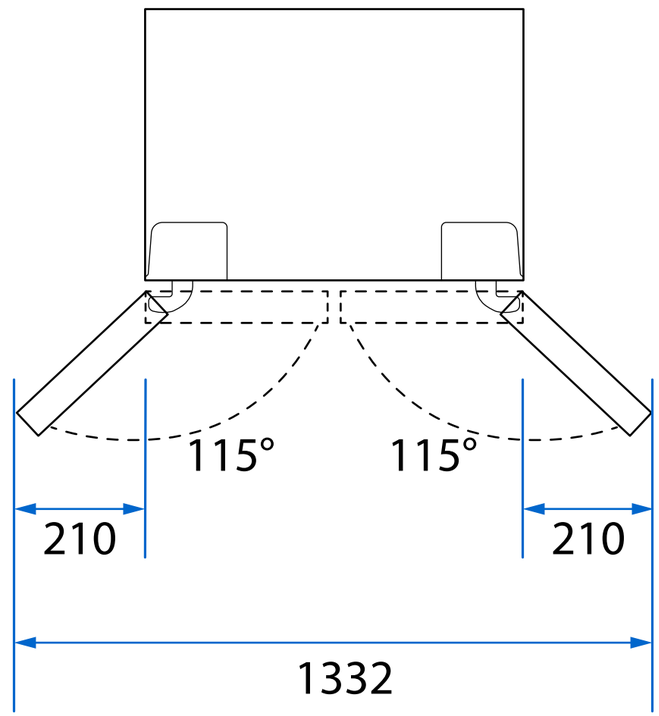
115°
115°
210
210
1332

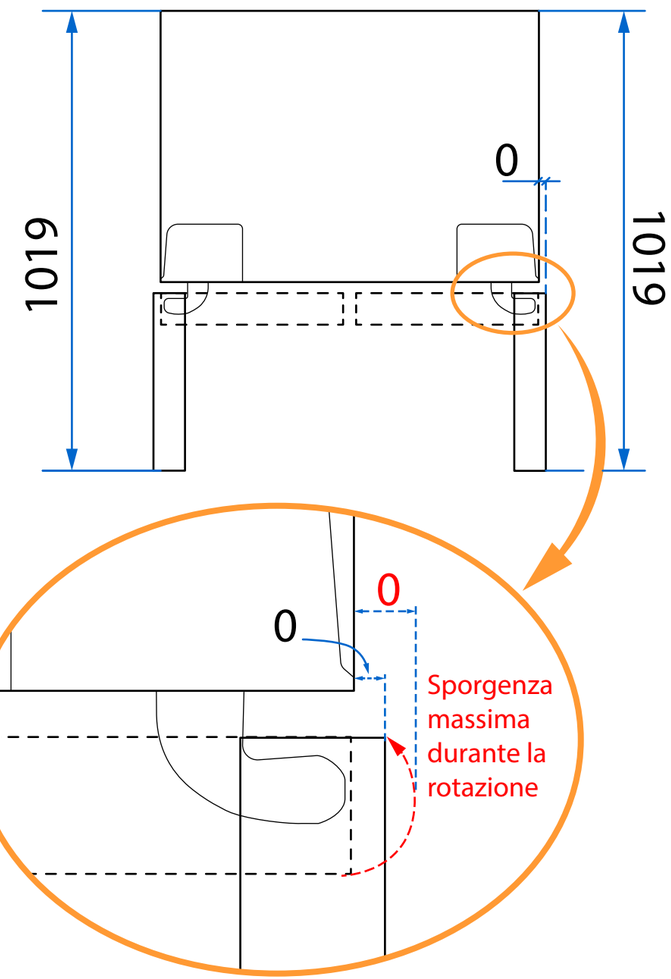
0
1019
1019
0
0
Sporgenza
massima
durante la
rotazione

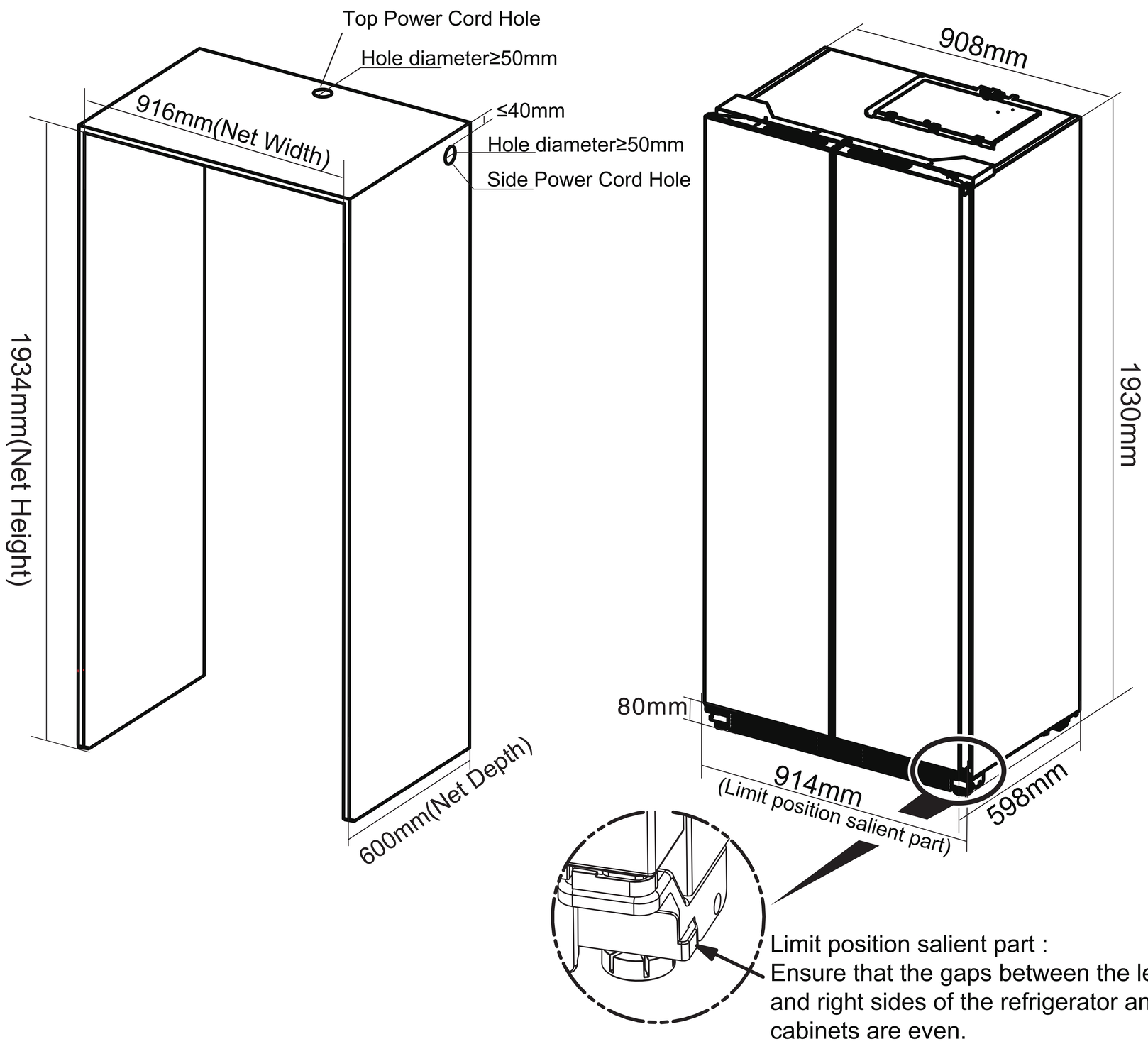
Top Power Cord Hole
Hole diameter≥50mm
916mm(Net Width)
≤40mm
Hole diameter≥50mm
Side Power Cord Hole
1934mm(Net Height)
600mm(Net Depth)
908mm
1930mm
80mm
914mm
(Limit position salient part)
598mm
Limit position salient part :
Ensure that the gaps between the left and right sides of the refrigerator and cabinets are even.